JEAN-JACQUES DeLISLE | Technical Engineering Editor

Signal and Spectrum Analyzers Flex Bandwidth and Memory

To meet the needs of the latest industry demands, signal and spectrum analyzers are increasing in bandwidth, frequency, portability, and memory.

FLEXIBLE AND WIDER-BANDWIDTH signal/spectrum analyzers are being manufactured to meet the latest techniques, such as carrier aggregation, massive multiple input multiple output (MIMO), 5G, and the growth of automated test. As RF-to-digital conversion electronics have been separated from the processing or display devices, low-cost and highly versatile signal/spectrum analyzers have emerged that are either PC-controlled or PC-driven. Meanwhile, electronic-warfare (EW) and defense applications are moving far beyond telecommunications applications in their demands for performance and capabilities. These applications are demanding a shift in performance and versatility that is changing the face of signal/spectrum analyzers as we know it.

The amount of memory needed to store the RF signal records increases with the record sample rate and resolution.

ANALYZING DEEPLY

Without post-analysis, events or anomalies of interest in EW system integration or real-world testing are often long-term or very difficult to catch. This type of analysis also requires the use of sophisticated tools, such as MATLAB, and other computer-driven vector-signal-analysis tools. Deep-memory systems—with the ability to record, search, analyze, simulate, and replay over long periods—are becoming more necessary when analyzing and validating the latest EW technologies. For example, X-Com has developed a signal-analyzer-based system, the IQC91000A, with 1000 MHz of I/Q data record and playback from 0.5 to 18 GHz. This rack-mount device set works with commercially available signal analyzers and records up to 90 minutes continuously with 30 Terabytes of data storage.

HIGHER HIGHS

Widening the analysis bandwidth of signal/spectrum analyzers is a growing necessity for industries ranging from telecommunications to EW. In addition, many cutting-edge technology developers are looking to extend native frequency coverage into the millimeter-wave bands. For 5G research and millimeter-wave backhaul applications, frequencies must extend into the 60-GHz unlicensed bands as well as the lightly licensed 70-GHz, 80-GHz, and 90-GHz bands. Meeting these needs requires signal/spectrum analyzers with several gigahertz of analysis bandwidth and native frequency range beyond 60 GHz. High-quality and wideband harmonic mixers also are in demand, as they will extend the frequency range into the upper-millimeter waves.

The latest millimeter-wave projects often include the unlicensed bands between 57 and 64 GHz.

In response to these trends, Rohde & Schwarz's R&SFSW67 signal and spectrum analyzer spans 2 Hz to 67 GHz while providing 2 GHz analysis bandwidth and 160 MHz real-time analysis bandwidth. The instrument boasts phase noise of -137 dBc/Hz at a 10-kHz offset with a 1-GHz carrier.

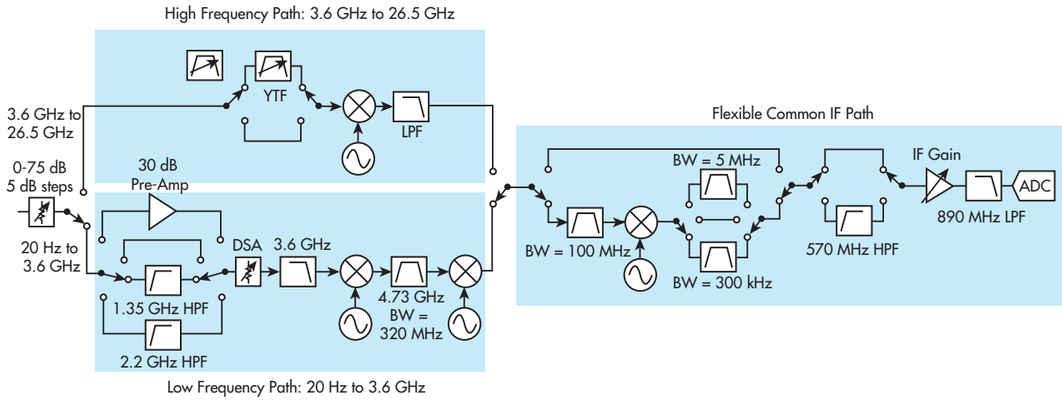

PCI-based test and measurement instruments are increasing in functionality and adoption. To support the latest wireless modulation techniques, bandwidths approaching 1 GHz or more are needed in a modular package.

INCREASING MODULARITY

Modular instruments based on the AXI or PXI platforms have the ability to upgrade the processing and measurement components as the latest technologies become available. All of the system components—the display, digitizer, processor, memory, digital signal processor, mixers, and amplifiers—can be user replaced and upgraded as needed. Moreover, different programming and processing architectures can be used on these modular systems. For example, MATLAB, Labview, GNU Radio, and other tools can often be used alongside modular instruments to create custom modulation, demodulation, or analysis features. Another key aspect of the modular architecture is the opportunity to have a massively scalable system that can be expanded at a reasonable cost.

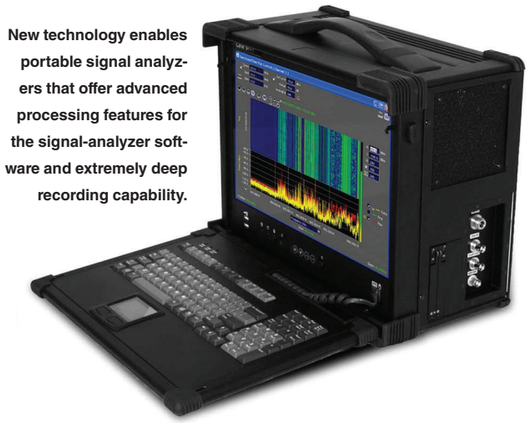

New technology enables portable signal analyzers that offer advanced processing features for the signal-analyzer software and extremely deep recording capability.

As an example of such systems, the PXIe-5668R modular vector signal and spectrum analyzer from National Instruments operates to 26.5 GHz with 765 MHz of instantaneous bandwidth over 3.6 GHz. It performs with a phase noise of -129 dBc/Hz at 10 kHz offset (800 MHz) with an average noise floor of -166 dBm/Hz at 1 GHz. These features enable quality measurements at 12 bits of maximum resolution. The 5668R uses a dual-signal path architecture with low- and high-frequency measurement paths working in tandem. As a result, low- and high-frequency performance is achieved without the compromises that would otherwise be necessary to cover the full range of frequencies.

RECORD, ANALYZE, AND CARRY

Designers are calling for increased portability and ruggedness in test equipment, a trend partially enabled by the hardware required to perform high-quality measurements, which is decreasing in size, weight, and cost. With their lower cost and smaller form factors, these devices are enabling more applications in telecommunications, EW, and signal-intelligence (SIGINT). For instance, standalone portable instruments can now feature ruggedized, commercially available computers and specialized signal/spectrum-analyzer hardware.

505MRF_41G.indd 90-91 5/5/15 11:47 AM

An example of a fully portable signal/spectrum analyzer is Aeroflex's CS9000SM broadband signal analyzer and recorder. Combining a portable signal/spectrum analyzer and a deep memory recorder, the CS9000SM can record to 12 GHz while providing 40 MHz of instantaneous bandwidth. Because the analyzer is also a portable computer, the analysis of real-time and recorded signals is possible with the multi-threaded system application software.

PC-controlled portable signal/spectrum analyzers have the benefit of being able to operate even with computing units with limited processing.

MASTERMIND PC CONTROL

PC-controlled signal/spectrum-analyzer units have digital-signal-processing (DSP) capability onboard, but rely on a PC for control and display. The device configurations are generally set by the computer control. The data requested by the computer is sent in pre-formatted data units, which the custom software translates into display data. An example is Aaronia AG's Spectran HF-60100 V4 X, which spans 9 kHz to 9.4 GHz with 50 MHz resolution bandwidth. The HF-60100 comes with custom software that operates on Windows, Linux, and Macintosh computers. It communicates to the computer via USB 2.0.

Another example is Berkeley Nucleonics Corp.'s RTSA7500. With 100 MHz of real-time bandwidth and a range to 27 GHz, the RTSA7500 can use its triggering—which is based on field-programmable gate arrays (FPGAs) for custom time-varying signal detection. The RTSA ships with several open-source application programming interfaces (APIs) for MATLAB, LabView, Python, C/C++, and SCIP/VRT. These APIs enable user-customizable and programmable control over 10/100/1G Ethernet.

PUMPING RF DATA

If the signal/spectrum analyzer's computational processing is removed to an external computer, a much lower-cost and smaller-form-factor analyzer will result. These PC-driven devices pass RF digitized signal data to an external computer, which analyzes, demodulates, and displays the outgoing signal data. The data for these instruments streams at extremely high rates for most common data bus architectures—in the hun-

Defense Electronics serves electronic design engineers working in defense and aerospace markets with the latest technology-based news, design, and product information. It reviews the latest advances in electronics technologies related to military and aerospace electronic systems, from the device and component levels through the system level, also covering the latest developments in the software needed to simulate those defense/aerospace systems and the test equipment needed to analyze and maintain them. It is the industry's most trusted source of technical information for electronic engineers involved in military/aerospace circuit and system design.

WE SUPPORT
THE DESIGN PROCESS
FROM INTENT TO
ACTION

defense electronics

A Special Section to
PENTON'S DESIGN ENGINEERING & SOURCING GROUP

Penton
inform engage advance

WHERE ENGINEERING COMES FIRST

www.knowlescapacitors.com

Team Players

DLI • NOVACAP • SYFER • VOLTRONICS

The coming together of some of the world's leading specialty capacitor manufacturers into one organization, **Knowles,** has created a single source for high technology passive components:

- **Multilayer Ceramic Capacitors**
- **Single Layer Capacitors**
- **EMI Suppression Filters**
- **Trimmer Capacitors**
- **Thin Film Devices**

knowles
DLI•Novacap•Syfer•Voltronics

505MRF_41G.indd 92-93

5/5/15 11:47 AM

dreds of megahertz. As a result, powerful multicore processors are needed to analyze and demodulate the data. The most common databus option for these devices is USB 3.0 and Ethernet. Future versions may use the greater data pipe of USB 3.1 with the USB C variant, which can transfer both tens of watts of power and 10-Gb/s data-transfer speeds.

The RSA306 real-time spectrum analyzer from Tektronix, for example, covers 9 kHz to 6.2 GHz. The company claims that it provides 100% probability of intercept (POI) of 100 µs signals. With 40 MHz of bandwidth and an uncorrected analog-to-digital-conversion (ADC) rate of 112 MSamples/s at 14-bit depths, the RSA306 can stream an average of 224 MB/s to the PC. To make full use of the device's acquisition capability, common commercial Intel i7 processors (third generation and above) are recommended with 8 GB of RAM. Tektronix offers its SignalVu-PC software free for use with the RSA306 for both display and processing.

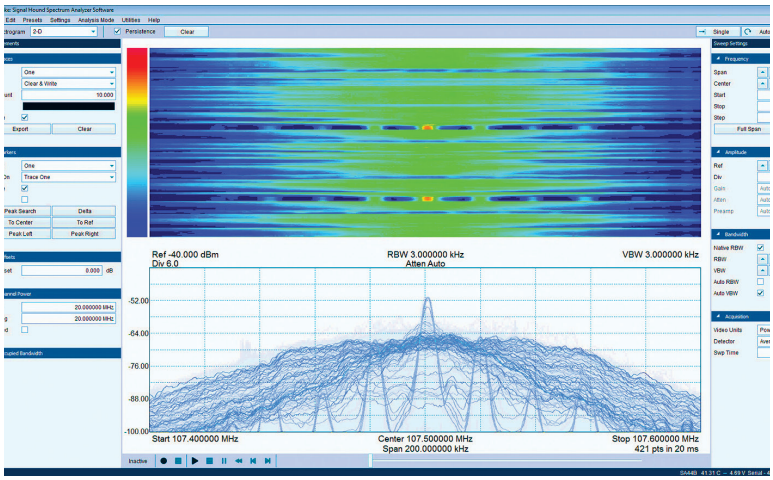

A lot of PC-driven signal/spectrum-analyzer software is shared free-of-charge and is often updated with new features requested by the user community.

Signal Hound's BB60C also offers USB 3.0 streaming of digitized RF data. Spanning 9 kHz to 6 GHz, the analyzer can stream 140 MB/s of sustained calibrated I/Q data with a sweep speed of 24 GHz/sec. With 27 MHz of instantaneous bandwidth and 75% overlapping Fast Fourier Transforms (FFTs),the BB60C also promises 100% POI of 1 µs signals. Due to commerce control (ECCN=3A002.c5), however, the analyzer does not natively offer frequency mask triggering (FMT). However, the BB60C is paired with a compiled API and open-source signal/spectrum-analyzer software that is open for community modifications and development.

DOUBLE-DUTY OSCILLOSCOPE

Some PC-driven oscilloscopes also can offer FFT-based spectral-frequency responses, such as the Picoscope 6000 series. This analyzer can operate from previously captured data to the full-frequency coverage of the instrument at 350 MHz of bandwidth and with operation to 1 GHz. The PicoScope software has controls for the spectrum-analyzer functions. However, this software is not as sophisticated as dedicated spectrum-analyzer software with waterfall displays, an API, or modulation functions.

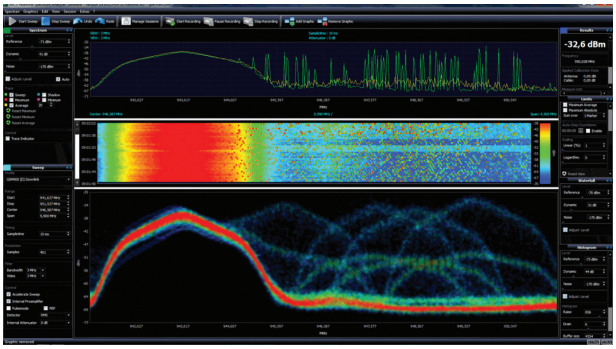

PC-controlled signal/spectrum analyzers rely on the software that is bundled with the tool, as the user interface defines the experience and functionality of the equipment.

SMARTPHONE OR SPECTRUM ANALYZER?

The smartphone-sized spectrum analyzers from SAF Tehnika range to 40 GHz by taking advantage of the shrinking costs and footprints of microwave and millimeter-wave components. Using battery power, the Spectrum Compact displays up to 100 MHz of bandwidth at sweep speeds of 0.5 seconds. It can be paired with free PC software for saving, comparing, and analyzing spectrum data. The small size and weight limit the Spectrum Compact to low-resolution tests, as the processing power and footprint are too small for extreme performance. This isn't an issue for tower technicians and remote verification applications, which benefit more from portability and rapid data acquisition.

Throughout the signal/spectrum-analyzer market, several common themes are clearly developing: increasing frequency coverage, bandwidth, customization, and modularity. For EW and SIGINT applications in particular, deep memory and sophisticated analysis tools are also increasing in importance. To tackle the latest telecommunications standards, such as 5G, the focus is on carrier aggregation, MIMO, and cognitive radio. Signal/spectrum analyzers must also become more scalable while raising bandwidths into the gigahertz. Automated manufacturing and low-cost tests take a different angle, relying on external processing and storage units to decrease the cost and complexity of signal/spectrum analyzers. Here, there is also more focus on software-development environments to enhance features. mw

505MRF_41G.indd 94 5/5/15 11:47 AM